Honeywell
THE POWER OF CONNECTED

Performance Series

Indoor/Outdoor Mounts and Accessories

Honeywell's Performance Series mounts and accessories provide a range of installation options for the Honeywell Performance Series IP cameras and Performance Series HQA cameras, including junction box, wall, pole, and corner mounts.

The mounts provide easy cable routing with no exposed wiring, and the cameras can be installed, adjusted, and tested without repositioning the housing. All of the mounts and accessories are suitable for indoor or outdoor use.

The junction boxes, and pole mount are constructed of die-cast aluminum. The corner mount adapter is made of SECC steel. The HEJB junction box is made of die-cast aluminum and SECC steel. All of the mounts and accessories are powder coated to match the finish of the camera.

Market Opportunities

Honeywell's Performance Series mounts and accessories provide excellent value at an attractive price, featuring simple, clean lines, and rugged construction for a wide range of mounting options.

HQA-BB1
Junction Box

HQA-WK/HQA-WKB
Wall Mounts

HQA-BB2/HQA-BB2G
Junction Boxes

HQA-WK2/HQA-WK2G
Wall Mounts

HQA-BB3/HQA-BB3G
Junction Boxes

HQA-PM2/HQA-PM2B
Pole Mount

HQA-BB4
Junction Box

HB34S2-CM /HB34S2-CM
Corner Mount

HQA-PK
Pendent Mount Cap

HQA-RS
Rain Shield Bracket

HQA-BB5
Junction Box

HBS2-BB
Junction Box

HQA-CB Ceiling
Mount Bracket

HQA-CBE Ceiling
Mount Extend Bracket

HQA-IC
In-Ceiling Bracket

HEJB
Junction Box

Indoor/Outdoor Mounts and Accessories

FEATURES AND BENEFITS

DESCRIPTION	JUNCTION BOX									WALL MOUNT				POLE MOUNT		CORNER MOUNT		CEILING MOUNT			PENDENT MOUNT	RAIN SHEILD
	HQA-BB1	HQA-BB2	HQA-BB2G	HQA-BB3	HQA-BB3G	HQA-BB4	HQA-BB5	HBS2-BB	HEJB	HQA-WK	HQA-WKB	HQA-WK2	HQA-WK2G	HQA-PM2	HQA-PM2B	HB34S2-CM	HB34S2-CMB	HQA-IC	HQA-CB	HQA-CBE	HQA-PK	HQA-RS
LOW PROFILE, CONTEMPORARY DESIGN	✓	✓	✓	✓	✓	✓	✓	✓	✓	✓	✓	✓	✓	✓	✓	✓	✓	✓	✓	✓	✓	✓
ECONOMICALLY PRICED	✓	✓	✓	✓	✓	✓	✓	✓	✓	✓	✓	✓	✓	✓	✓	✓	✓	✓	✓	✓	✓	✓
EASY CABLE FEED-THROUGH	✓	✓	✓	✓	✓	✓	✓	✓	✓	✓	✓	✓	✓	✓	✓	✓	✓	✓	✓	✓	✓	✓
DIE-CAST ALUMINUM	✓	✓	✓	✓	✓	✓	✓	✓	✓	✓	✓	✓	✓	✓	✓			✓	✓	✓	✓	✓
SECC STEEL									✓							✓	✓					
OFF-WHITE POWDER FINISH	✓	✓		✓		✓	✓	✓	✓	✓		✓		✓		✓		✓	✓		✓	✓
GREY POWDER FINISH			✓		✓						✓		✓		✓		✓			✓		
INDOOR/ OUTDOOR	✓	✓	✓	✓	✓	✓	✓	✓	✓	✓	✓	✓	✓	✓	✓	✓	✓	✓	✓	✓	✓	✓

DIMENSIONS

HQA-BB1

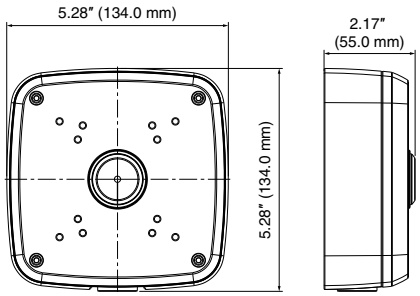

HBS2-BB

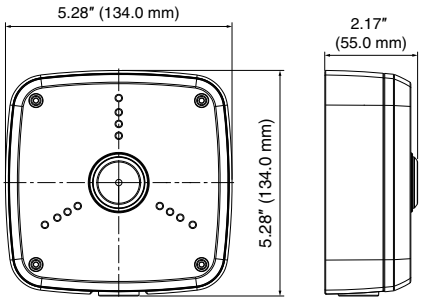

HQA-BB2/HQA-BB2G

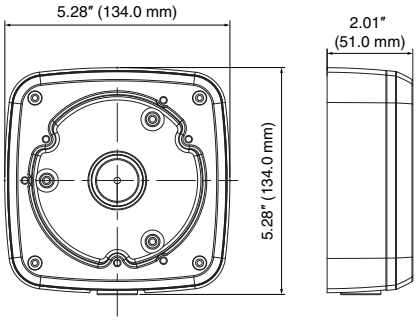

HEJB

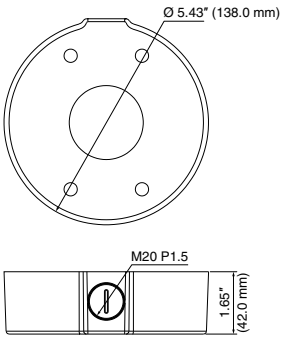

Indoor/Outdoor Mounts and Accessories

DIMENSIONS

HQA-BB3/HQA-BB3G

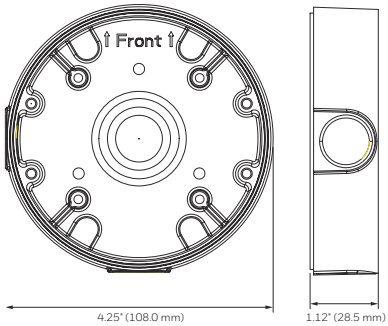

HQA-WK/HQA-WKB

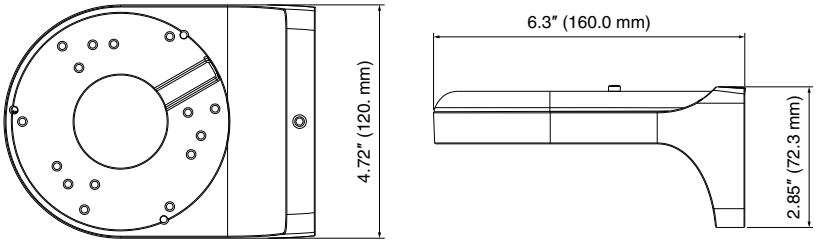

HQA-BB4

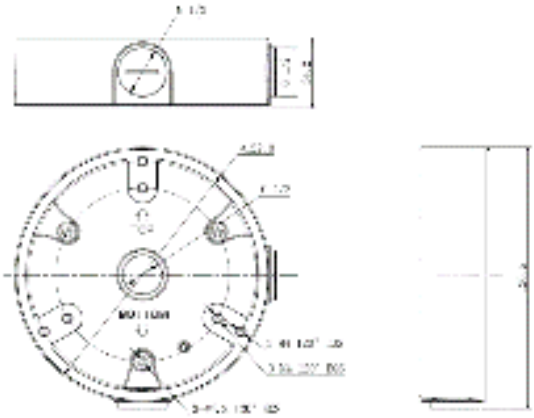

HQA-WK2/HQA-WK2G

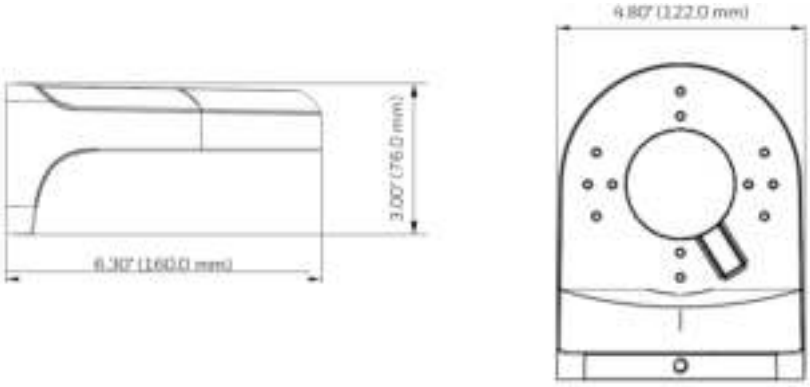

HQA-BB5

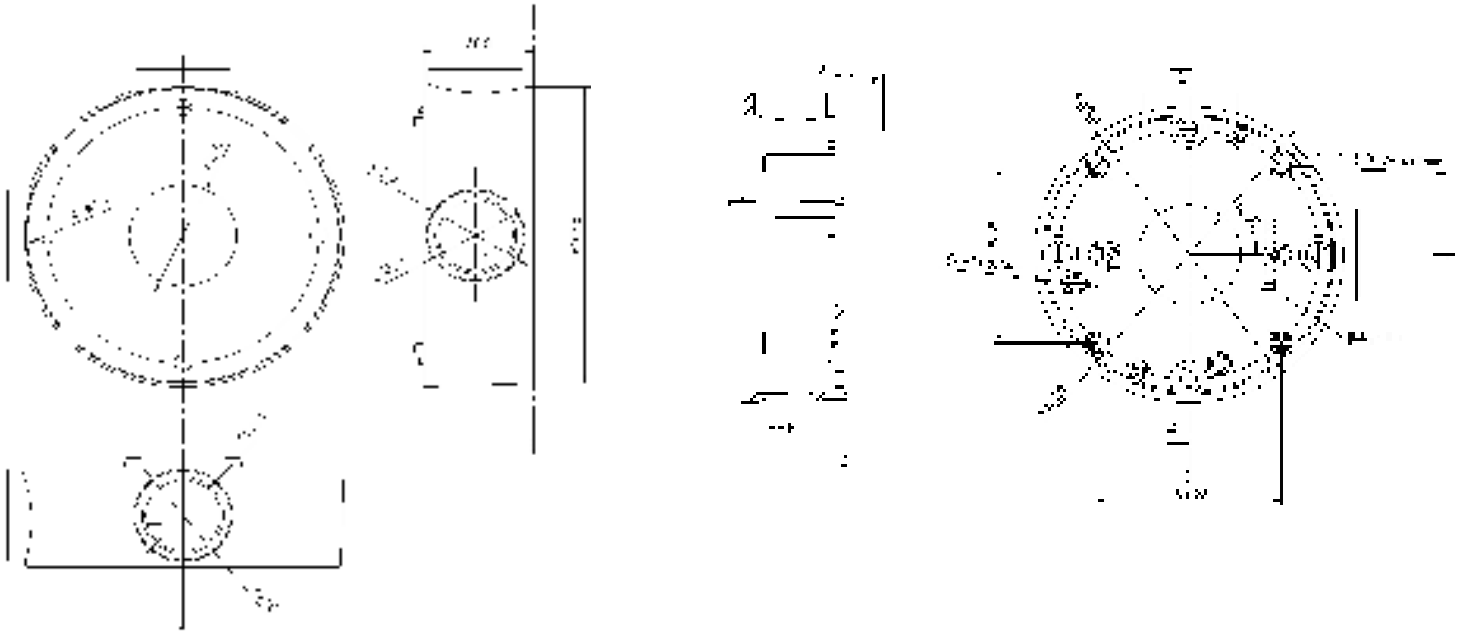

Indoor/Outdoor Mounts and Accessories

DIMENSIONS

HB34S2-CM/HB34S2-CMB

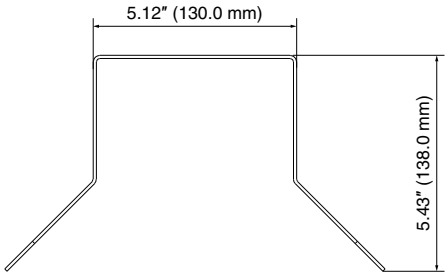

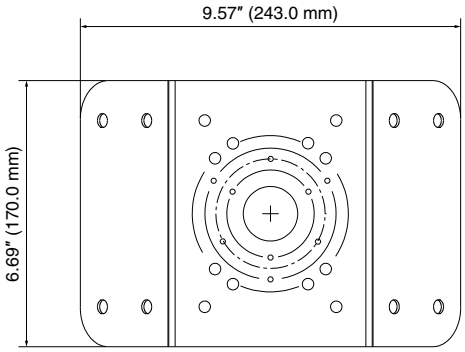

HQA-IC

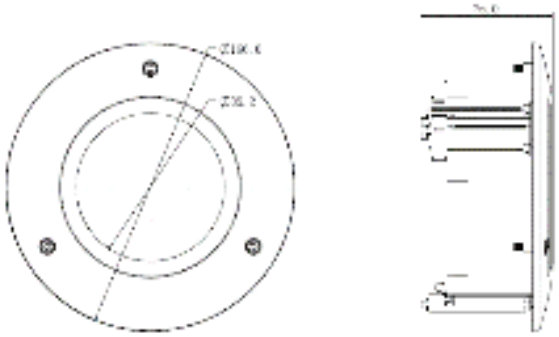

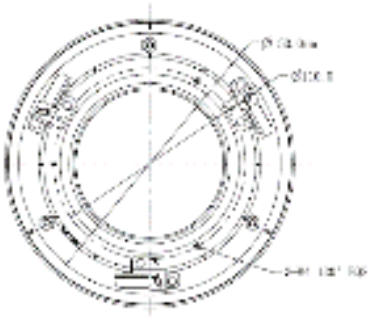

HQA-CB

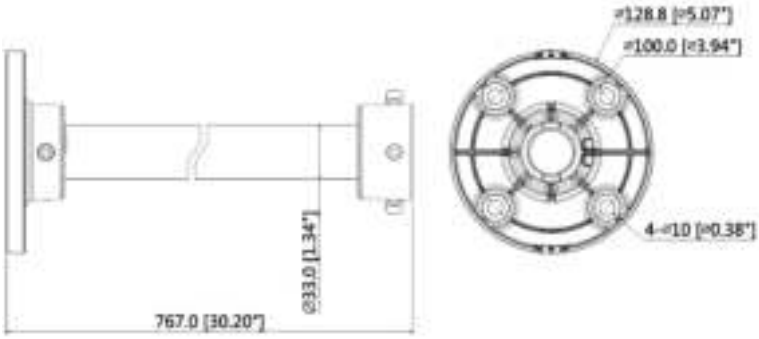

HQA-CBE

Indoor/Outdoor Mounts and Accessories

DIMENSIONS

HQA-PK

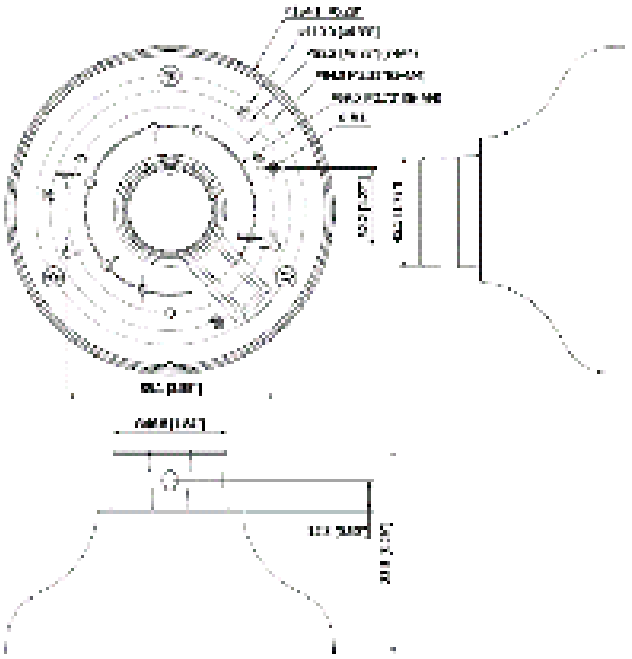

HQA-RS

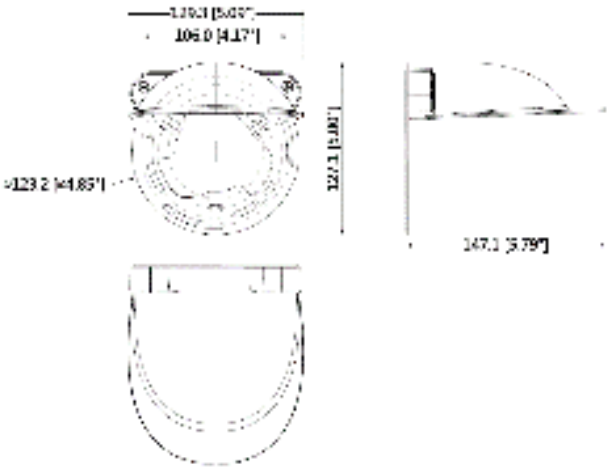

HQA-PM2/HQA-PM2B

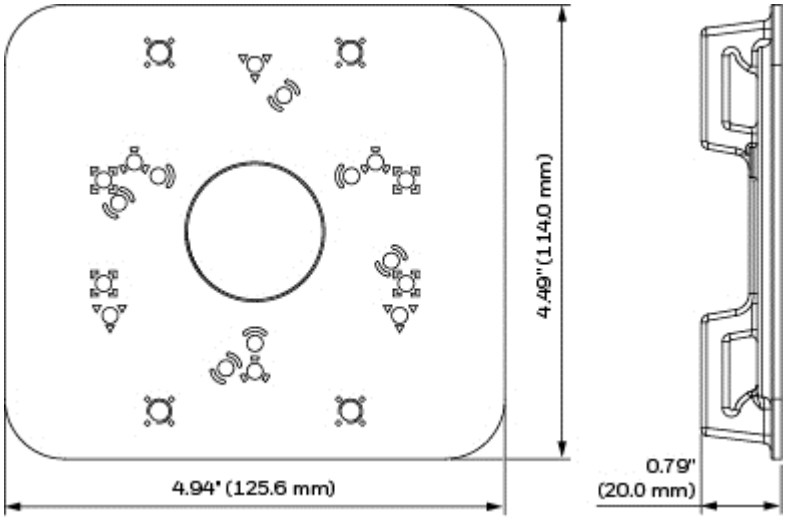

Indoor/Outdoor Mounts and Accessories

COMPATIBLE HQA AND IP CAMERAS

MOUNTS	COMPATIBLE PERFORMANCE HQA CAMERAS
HQA-BB1	HB74HD2, HD30HD1, HD30HD2, HB74HD4
HQA-BB2/G	HD31HD2, HD73HD1, HD74HD2, HD231HD2, HD274HD2, HD72HD4, HD274HD4
HQA-BB3/G	HD30HD4
HQA-BB4	HD73HD1, HD41XD2, HD274HD2, HD74HD2, HD42XD2, HB276HD4, HD231HD2, HD31HD2, HE42XD2, HE42XD2G, H4D42HD8
HQA-BB5	No compatible HQA cameras
HBS2-BB	HB74HD1, HB75HD1, HB76HD2, HB276HD2, HD29HD1, HD31HD2, HD231HD2, HB276HD4
HEJB	HB74HD1, HD31HD2, HD231HD2
HQA-PM2/ HQA-PM2B	All HQA cameras (with a compatible junction box)
HB34S2-CM/ HB34S2-CMB	All HQA cameras (with a compatible junction box)
HQA-WK/ HQA-WKB	HD29HD1, HD31HD2, HD73HD1, HD74HD2, HD231HD2, HD274HD2, HD274HD4, HD72HD4
HQA-WK2/G	HD30HD1, HD30HD2
HQA-IC	HD73HD1, HD41XD2, HD274HD2, HD74HD2, HD42XD2, HB276HD4, H4D42HD8
HQA-RS	HD30XD2, HD72HD4, HD73HD1, HD41XD2, H4D42HD8
HQA-PK*	HD30XD2, HD72HD4, HD73HD1, HD41XD2, HD274HD2, HD74HD2, HD42XD2, HB276HD4, HD30HD1, HD30HD2, HD29HD1, HE41XD2, HE30XD2, HE30XD2G, HD30HD4, HD231HD2, H4D42HD8HD31HD2, HE42XD2, HE42XD2G, H4D42HD8 (with compatible HQA-CB)
HQA-CB*	HD30XD2, HD72HD4, HD73HD1, HD41XD2, HD274HD2, HD74HD2, HD42XD2, HB276HD4, HD30HD1, HD30HD2, HD29HD1, HE41XD2, HE30XD2, HE30XD2G, HD30HD4, HD231HD2, HD31HD2, HE42XD2, HE42XD2G , H4D42HD8 (with compatible HQA-PK)
HQA-CBE	(Used with HQA-CB together)

MOUNTS	COMPATIBLE PERFORMANCE IP CAMERAS
HQA-BB1	HBW2PR1, HBW4PR1, HBD8PR1
HQA-BB2/G	H4D3PRV2, H4D2PRV3, H4W2PRV2, H4W4PRV2, H4W4PRV3, HEW2PR2, HEW4PR2, H4D8PR1, HFD5PR1
HQA-BB3/G	H2W2PRV3, H2W4PRV3, HEW2PR1, HEW2PRW1, HEW3PR3, HEW4PRW3, HED8PR1, H2W2PC1M, H2W4PER3, H2W2PER3, HEW4PER3B, HEW2PER3
HQA-BB4	H4D3PRV2, H4W4PRV2, H4W2PRV2, H4W4PER2, HED1PR3, HED3PR3, HEW4PR2, HEW2PR2, HED2PER3, HEW4PER3, HEW4PER2, HEW2PER2, H4W2PER2, H4W8PR2, H4W2PER3
HQA-BB5	HBW4PGR1
HBS2-BB	HED1PR3, HED3PR3, HBD1PR1, HBD3PR1, HBD3PR2, HBW2PR2, HBW4PR2, HBW2PER2, HBW8PR2
HEJB	HED1PR3, HED3PR3, HBD1PR1, HBD3PR1
HQA-PM2/ HQA-PM2B	HED8PR1, HBD8PR1, H4D8PR1, HFD5PR1, H2W2PC1M, HEW4PER2, HEW4PER2B, HEW2PER2, H4W2PER2, H2W4PER3, H2W2PER3, H4W8PR2, HEW4PER3B, HEW2PER3, H4W2PER3, HBW2PER1, HBW2PER2, HBW8PR2 (with a compatible junction box)
HB34S2-CM/ HB34S2-CMB	H2W2PRV3, H2W4PRV3, H4W2PRV2, H4W4PRV2, H4W4PRV3, HBW2PR1, HBW4PR1, HBW2PR2, HBW4PR2, HEW2PR1, HEW2PRW1, HEW2PR2, HEW4PR2, HEW4PR3, HEW4PRW3, HED8PR1, HBD8PR1, H4D8PR1, HBW2PER1, HBW2PER2, HBW8PR2 (with a compatible junction box)
HQA-WK/ HQA-WKB	HED1PR3, HED3PR3, H4D3PRV2, H4D3PRV3, H4W2PRV2, H4W4PRV2, H4W4PRV3, HEW2PR2, HEW4PR2, H4D8PR1, HFD5PR1, HEW4PER2, HEW4PER2B, HEW2PER2, H4W2PER2, H4W8PR2, H4W2PER3
HQA-WK2/G	H2W2PRV3, H2W4PRV3, HEW2PR1, HEW2PRW1, HEW4PR3, HEW4PRW3, HED8PR1, H2W2PC1M, H2W4PER3, H2W2PER3, HEW4PER3B, HEW2PER3
HQA-IC	H4D3PRV2, H4W4PRV2, H4W2PRV2, H4W4PER2, H4W2PER2, H4W8PR2
HQA-RS	H4D3PRV3, H4D3PRV2, H2W4PRV3, H2W2PRV3, H4W4PRV3, H4W4PRV2, H4W2PRV2, H4D8PR1, H4W4PER3, H4W4PER2, H4W2PER2, H4W8PR2
HQA-PK*	H4D3PRV3, H4D3PRV2, H2W4PRV3, H2W2PRV3, H4W4PRV3, H4W4PRV2, H4W2PRV2, H4D8PR1, H4W4PER3, H4W4PER2, HED1PR3, HED3PR3, HEW4PR3, HEW2PR1, HEW4PRW3, HEW2PRW1, HEW4PR2, HEW2PR2, HED8PR1, HED2PER3, HEW4PER3, H2W2PC1M, HEW4PER2, HEW4PER2B, HEW2PER2, H4W2PER2, H2W4PER3, H2W2PER3, H4W8PR2, HEW4PER3B, HEW2PER3, H4W2PER3 (with compatible HQA-CB)
HQA-CB*	H4D3PRV3, H4D3PRV2, H2W4PRV3, H2W2PRV3, H4W4PRV3, H4W4PRV2, H4W2PRV2, H4D8PR1, H4W4PER3, H4W4PER2, HED1PR3, HED3PR3, HEW4PR3, HEW2PR1, HEW4PRW3, HEW2PRW1, HEW4PR2, HEW2PR2, HED8PR1, HED2PER3, HEW4PER3, H2W2PC1M, HEW4PER2, HEW4PER2B, HEW2PER2, H4W2PER2, H2W4PER3, H2W2PER3, H4W8PR2, HEW4PER3B, HEW2PER3, H4W2PER3 (with compatible HQA-PK)
HQA-CBE	(Used with HQA-CB together)

Indoor/Outdoor Mounts and Accessories

SPECIFICATIONS

MECHANICAL			
MODEL NO.	UNIT WEIGHT	CONSTRUCTION	DIMENSIONS
HQA-BB1	1.1 lb (0.5 kg)	Die-cast aluminum	5.28 × 5.28 × 2.17 in. (134.0 × 134.0 × 55.0 mm)
HQA-BB2/HQA-BB2G	1.32 lb (0.6 kg)	Die-cast aluminum	5.28 x 5.28 x 2.01 in. (134.0 x 134.0 x 51.0 mm)
HQA-BB3/HQA-BB3G	1.08 lb (0.49 kg)	Die-cast aluminum	6.30 x 4.80 x 3.00 in. (160.0 x 122.0.0 x 76.0 mm)
HQA-BB4	0.53 lb (0.24 kg)	Aluminum	ø 4.80 x 1.35 in. (ø 122.0x34.2 mm)
HQA-BB5	0.55 lb (0.25 kg)	Aluminum Alloy	ø 3.48 in. (ø 88.5 mm)
HBS2-BB	1.1 lb (0.5 kg)	Die-cast aluminum	5.28 × 5.28 × 2.17 in. (134.0 × 134.0 × 55.0 mm)
HEJB	0.84 lb (0.38 kg)	Die-cast aluminum and SECC steel	ø 5.43 × 1.65 in. (ø 138.0 × 42.0 mm)
HQA-PM2 (requires a compatible junction box)	0.6 lb (0.27 kg)	Die-cast aluminum	4.94 x 4.49 x 0.79 in. (125.6 x 114.0 x 20.0 mm)
HQA-PM2B	0.6 lb (0.27 kg)	Aluminum & SUS304	4.94 x4.49 x0.79 in. (125.6 x114 x20 mm)
HB34S2-CM (requires a compatible junction box)	3.75 lb (1.7 kg)	SECC steel	9.57 × 6.69 × 5.43 in. (243.0 × 170.0 × 138.0 mm)
HB34S2-CMB	3.75 lb (1.7 kg)	SECC	9.57 x 6.69 x 5.43 in. (243 x 170 x 138mm)
HQA-WK	2.2 lb (1.0 kg)	Die-cast aluminum and ABS	4.72 x 2.85 x 6.3 in. (120.0 x 72.3 x 160.0 mm)
HQA-WKB	1.1 lb (0.5 kg)	Aluminum & SECC	6.30 x 4.80 x 2.99 in. (160 x 122 x 76 mm)
HQA-WK2/HQA-WK2G	0.35 lb (0.16 kg)	Die-cast aluminum	ø 4.25 x 1.12 in. (ø 108.0 x 28.5 mm)
HQA-IC	0.71 lb (0.32 kg)	SECC & PC	ø 6.54 x 2.98 in. (ø 166.0x75.8 mm)
HQA-RS	0.55 lb (0.25 kg)	Aluminum & SGCC	5.09 x 5 x 5.79 in. (129.3 x 127 x 147 mm)
HQA-PK	0.64 lb (0.29 kg)	Aluminum	ø 5.28 x 3.29 in. (ø 134.1 x 83.5 mm)
HQA-CB	1.98 lb (0.9 kg)	Aluminum	ø 5.07 x 30.2 in. (ø 128.8 x 767.0 mm)
HQA-CBE	1.43 lb (0.65 kg)	Aluminum	ø 1.65 x 30.71 in. (ø 42 x 780 mm)

ORDERING

HQA-BB1	Junction Box, Off-White
HQA-BB2	Junction Box, Off-White
HQA-BB2G	Junction Box, Grey
HQA-BB3	Junction Box, Off-White
HQA-BB3G	Junction Box, Grey
HQA-BB4	Junction Box, Off-White
HQA-BB5	Junction Box, Off-White
HBS2-BB	Junction Box, Off-White
HEJB	Junction Box, Off-White
HQA-PM2	Pole Mount Adapter, Off-White
HQA-PM2B	Pole Mount Adapter, Gray
HB34S2-CM	Corner Mount Adapter, Off-White
HB34S2-CMB	Corner Mount Adapter, Gray
HQA-WK	Wall Mount, Off-White
HQA-WKB	Wall Mount Bracket, Gray
HQA-WK2	Wall Mount, Off-White
HQA-WK2G	Wall Mount, Grey
HQA-IC	In-Ceiling Bracket, Off-White
HQA-RS	Rain Shield Bracket, Off-White
HQA-PK	Pendant Mount Cap, Off-White
HQA-CB	Ceiling Mount Bracket, Off-White
HQA-CBE	Ceiling Mount Extend Bracket, Off-White

- A compatible junction box is required when installing to either the the HQA-PM2 pole mount or the HB34S2-CM corner mount.
- The HQA-BB4 must be used when installing the camera to HQA-PM2 or HQA-PM2B, vice versa.
- The HQA-PK must be used when installing the camera to HQA-CB.
- The HQA-CBE must be used with HQA-CB together.

For more information

www.honeywellvideo.com

Honeywell Security
2700 Blankenbaker Pkwy, Suite 150
Louisville, KY 40299
1.800.323.4576
www.honeywell.com

Honeywell reserves the right, without notification, to make changes in product design or specifications.

HSV-HQA MOUNTS-02-US(1118)DS-Y
© 2018 Honeywell International Inc.

Honeywell