3-IDC8/4 Traditional Zone I/O Module Installation Sheet

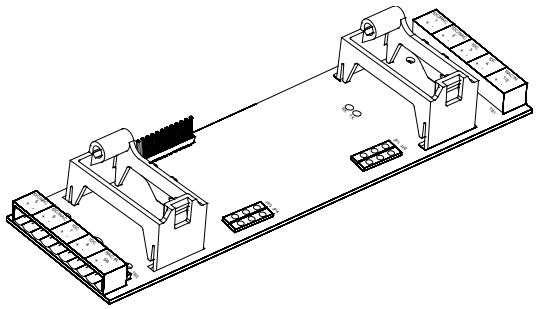

Description

The 3-IDC8/4 Traditional Zone I/O Module provides eight Class B traditional direct connect initiating device circuits (IDCs) for compatible two-wire smoke detectors and dry contact initiating devices. Four of the initiating device circuits can be converted to Class B notification appliance circuits (NACs). The four IDC/NAC circuits must be configured as either an NAC or an IDC, never both.

Each IDC can be set for latching or nonlatching operation and smoke verified or unverified operation using the software definition utility.

Each pair of NAC circuits may be configured to provide 24 VDC from the internal chassis rail, 24 VDC from an external power supply, or signals from an external source for notification, audio, and telephone applications. NAC input terminals are provided to supply the external signal source.

Installation

Install and wire the 3-IDC8/4 in accordance with applicable national and local codes, ordinances, and regulations.

WARNING: Electrocution hazard. To avoid personal injury or death from electrocution, remove all sources of power and allow stored energy to discharge before installing or removing equipment.

Caution: Equipment damage hazard. This product is sensitive to electrostatic discharge (ESD). To avoid damage, follow accepted ESD handling procedures

To install the 3-IDC8/4:

1. If circuits are configured as NACs, position jumpers at the correct locations for an internal or external riser source. See “Jumper settings” on page 2.
2. Install the module on the rail chassis, pressing the mounting studs firmly into the mounting holes. See Figure 1.
3. Connect field wiring. See “Wiring” on page 2.

Figure 1: Installing the 3-IDC8/4

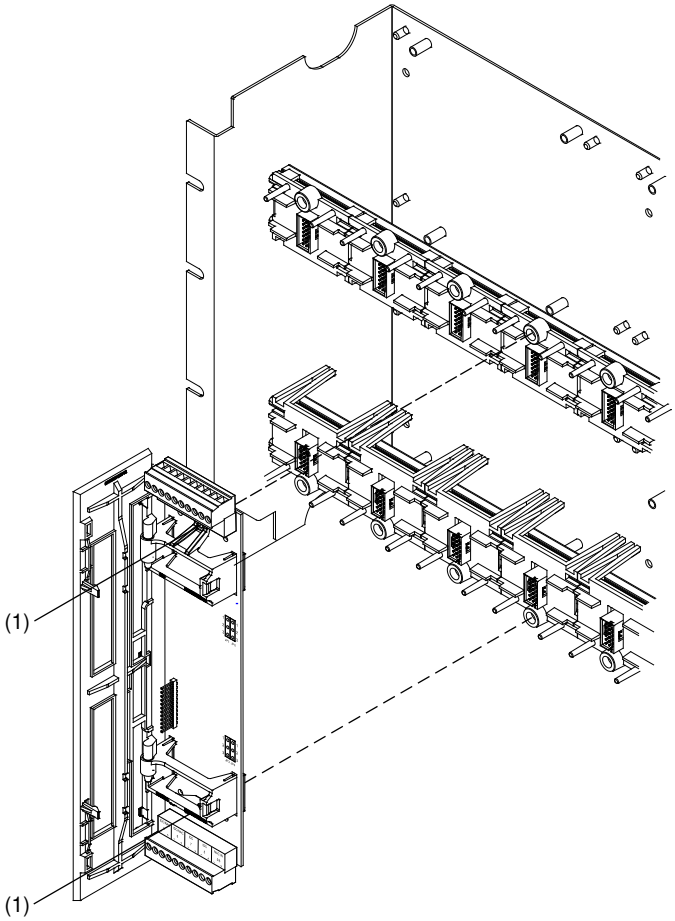

(1) Mounting studs

© 2014 UTC Fire & Security Americas Corporation, Inc.

P/N 270492-EN • REV 04 • ISS 10JUL14

Jumper settings

For circuits configured as NACs, the NAC pairs share a common power/signal source. Two jumpers on the module select the signal source for each NAC pair. See Figure 2 for jumper pin numbers.

Notes

- Jumper positions must be set in parallel. Set jumpers in both JP1 and JP2 the same. Set jumpers in both JP3 and JP4 the same.
- Jumpers have no effect when the IDC/NAC circuits are configured as IDC circuits.

Table 1: Jumper settings for circuit power/signal source

Circuits	External [1]	Internal 24 VDC [2]
IDC/NAC1 and 2	JP1 to 1 and 2 JP2 to 1 and 2	JP1 to 2 and 3 JP2 to 2 and 3
IDC/NAC5 and 6	JP3 to 2 and 3 JP4 to 2 and 3	JP3 to 1 and 2 JP4 to 1 and 2

[1] Supplied via NAC IN terminals.
[2] See total current limit in “Specifications” on page 3.

Wiring

Connect field wiring as shown in Figure 2.

- Wiring is supervised and power-limited.
- Maintain 0.25 in. (6 mm) separation between power-limited and nonpower-limited wiring at all times. Route the power-limited wiring through the notches at the right front of the chassis. Secure the wiring to the cabinet using nylon cable ties.
- If shielded cable is used, it must be continuous, free from earth ground, and must only be connected to the ground terminal on the source of the riser.
- Dedicated initiating device circuits (Class B, Style B): IDC3, IDC4, IDC7, IDC8.
- Circuits configurable as IDC or NAC (Class B, Style Y): IDC/NAC1, IDC/NAC2, IDC/NAC5, IDC/NAC6.
- Synchronized operation of Genesis strobes requires a separately installed synchronization device. See the control panel or power supply compatibility list for compatible synchronization devices.
- For a list of 3-IDC8/4 compatible devices, see the *EST3 Compatibility List* (P/N 3100427-EN) and *EST3X Compatibility List* (P/N 3101801-EN).

Figure 2: Wiring the 3-IDC8/4

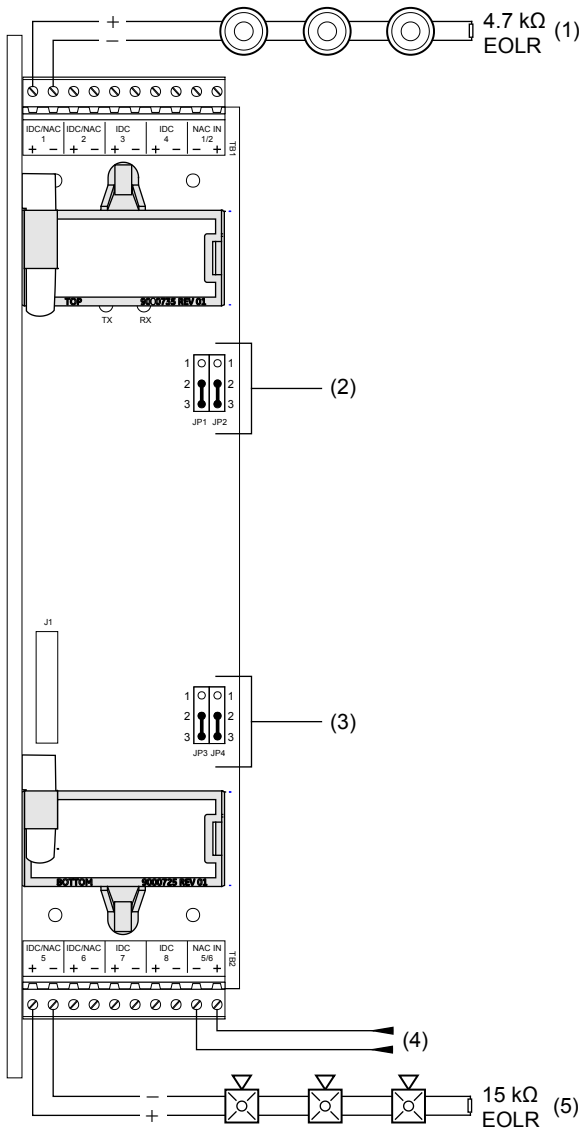

Legend
(1) IDC/NAC1 configured as an IDC circuit (use a UL/ULC Listed 4.7 kΩ EOLR)
(2) Jumper JP1 and JP2 (NAC1 and 2)
(3) Jumper JP3 and JP4 (NAC5 and 6)
(4) From external source
(5) IDC/NAC5 configured as an NAC circuit (use a UL/ULC Listed 15 kΩ EOLR)

Note: Signal polarity is shown in supervisory mode. For an NAC, the polarity reverses when the circuit is active.

Specifications

Quantity	8 circuits total: 4 dedicated IDCs 4 configurable as IDCs or NACs
Voltage	24 VDC
Current [1] Standby Alarm	 48 mA at 24 VDC 408 mA at 24 VDC
Initiating device circuit Wiring configuration Voltage Short circuit current Circuit resistance Capacitance EOLR Compatible detectors	 Class B (Style B) 16.23 to 25.4 VDC max., ripple 400 mV 75.9 mA max. 50 Ω max. 100 µF max. 4.7 kΩ (UL/ULC Listed) Refer to *EST3 Compatibility List* (P/N 3100427-EN) and *EST3X Compatibility List* (P/N 3101801-EN)
Notification appliance circuit Wiring configuration Output voltage Output current Special application Regulated Power EOLR	 Class B (Style Y) 24 VDC nom., 70 VRMS max. 3.5 A at 24 VDC tot., each NAC 3.5 A at 24 VDC tot., NAC pair [2] 7.0 A at 24 VDC tot. for all NACs when the chassis rail is used as the 24 VDC source 1 A at 24 VDC total for NAC pair (requires 5 A peak) [3] 3 V maximum line loss 60 W at 25 VRMS 100 W at 70 VRMS 15 kΩ (UL/ULC Listed)
Wire size	12 to 18 AWG (1.0 to 4.0 mm²)
Installation	One space on the rail chassis
Operating environment Temperature Relative humidity	 32 to 120°F (0 to 49°C) 0 to 93% noncondensing

[1] Does not include a control-display module on the NAC.

[2] When NAC pairs (NAC1 and 2 or NAC5 and 6) are configured for an internal 24 VDC source (see Table 1 on page 2).

[3] One 3-PPS primary power supply can support one regulated NAC pair, at 1 A total for EST3 systems only.

Regulatory information

North American standards	UL 864, ULC-S527
CPR certificates	Refer to the *European Marketplace Manual.*
EN 54	EN 54-2, EN 54-4, EN 54-16
EU compliance	CE
FCC compliance	This device complies with part 15 of the FCC Rules. Operation is subject to the following two conditions: (1) This device may not cause harmful interference, and (2) this device must accept any interference received, including interference that may cause undesired operation.
Environmental class	UL: Indoor dry IEC: 3K5
	2002/96/EC (WEEE directive): Products marked with this symbol cannot be disposed of as unsorted municipal waste in the European Union. For proper recycling, return this product to your local supplier upon the purchase of equivalent new equipment, or dispose of it at designated collection points. For more information see: www.recyclethis.info.

Contact information

For contact information, see www.edwardsutcfs.com.