Honeywell
THE POWER OF CONNECTED

Performance Series IP

H4W4PER2

WDR 4 MP IR Rugged Mini Dome Camera

HD

ONVIF | S G

OPERATIONAL	
VIDEO STANDARD	NTSC/PAL
SCANNING SYSTEM	Progressive scan
IMAGE SENSOR	1/3" 4 MP CMOS
NUMBER OF PIXELS (H × V)	2688 × 1520
MINIMUM ILLUMINATION	0.03 lux color @ F1.4 (Color, 1/3s, 30 IRE) 0 lux B/W with IR LEDs on @ F1.4
S/N RATIO	> 45 dB
ELECTRONIC SHUTTER SPEED	1/3(4) – 1/100,000 s
IR DISTANCE	Up to 148 ft (45 m), depending on scene reflectance
SMART IR	Auto/Manual
DAY/NIGHT	Auto (ICR)/Color/BW
BACKLIGHT COMPENSATION	BLC/HLC/WDR (120 dB)
WHITE BALANCE	Auto/Natural/Street Lamp/Outdoor/Manual
GAIN CONTROL	Auto/Manual
WIDE DYNAMIC RANGE	True WDR (120 dB)
NOISE REDUCTION	3D DNR
PRIVACY MASKING	Up to 4 configurable zones
MOTION DETECTION	Up to 4 configurable zones
REGION OF INTEREST	Up to 4 configurable zones
DIGITAL ZOOM	16x
LENS	2.7 – 13.5 mm, MFZ, F1.4
ANGLE OF VIEW	104° – 28° (H), 55° – 16° (V)
VIDEO	
VIDEO COMPRESSION	H.265+/H.265/H.264+/H.264
RESOLUTION	4 MP (2688×1520), QHD (2560×1440), 3 MP (2304×1296), 1080p (1920×1080), SXGA (1280×1024), 1.3 MP (1280×960), 720p (1280×720), D1 (704×576/704×480), VGA (640×480), CIF (352×288/352×240)
FRAME RATE	4 MP at 1 – 20fps, 3 MP at 1 – 25/30fps D1/CIF at 1 – 25/30fps
BIT RATE CONTROL	CBR/VBR
BIT RATE	H.265: 12K – 8448 Kbps H.264: 32K – 10240 Kbps
NETWORK	
ETHERNET	RJ-45 (10/100BASE-T)
SUPPORTED WEB BROWSERS	Internet Explorer (11.0+)
SUPPORTED OS	Windows 7 32-bit

NETWORK (CONT'D)	
PROTOCOLS	IPv4/v6, TCP/IP, UDP, RTP, RTSP, RTCP, HTTP, HTTPS, SSL, FTP, SMTP, DHCP, PPPoE, UPnP, SNMP v2/v3, Bonjour, DNS, DDNS, IEEE 802.1X, QoS, NTP
INTEROPERABILITY	ONVIF Profile S, Profile G
MAXIMUM USER ACCESS	20 users
SECURITY	User account and password protection, HTTPS, IP filter, IEEE 802.1X, digest authentication, user access log, TLS1.2, AES-256, SSH/Telnet closed, FTP disabled
EVENT	No SD card, SD card error, SD card capacity warning, network disconnection, IP address conflict, illegal access, video tampering, motion detection
EVENT NOTIFICATION	Record (SD card, NAS, FTP), relay output, email, snapshot
MICRO SD	Up to 128 GB microSDHC card, Class 10 (not included)
ELECTRICAL	
POWER SUPPLY	PoE (802.3af) Class 0, 12 VDC
POWER CONSUMPTION	8.5 W max. (IR LEDs on)
MECHANICAL	
DIMENSIONS	4.8" × 3.5" (122.0 mm × 88.9 mm)
PRODUCT WEIGHT	0.88 lb (0.4 kg)
PACKAGE WEIGHT	1.19 lb (0.54 kg)
CONSTRUCTION	Die-cast aluminum housing with powder coat
CONSTRUCTION COLOR	RAL 9003 (White)
ENVIRONMENTAL	
OPERATING TEMPERATURE	–22°F to 140°F (–30°C to 60°C)
STORAGE TEMPERATURE	–22°F to 140°F (–30°C to 60°C)
RELATIVE HUMIDITY	Less than 95%, non-condensing
INGRESS PROTECTION	IP66
IMPACT RESISTANCE	IK10
REGULATORY	
EMISSIONS	FCC Part 15B, EN 55032
IMMUNITY	EN 50130-4
SAFETY	EU: EN 60950-1 North America UL listed to UL/CSA 60950-1
ROHS	EN 50581

WDR 4 MP IR Rugged Mini Dome Camera

RECOMMENDED ACCESSORIES

SYSTEM COMPATIBILITY	
HEN*4	8/16/32/64-channel Focus 4K NVRs (H.264/H.265)
HEN*2	4/8/16-channel Performance Series NVRs (H.264)

MOUNTS AND ACCESSORIES		
HQA-WK		Wall Mount
HQA-PM2**		Pole Mount Bracket
HB34S2-CM**		Corner Mount Bracket
HQA-BB2		Junction Box

* Pre-installed storage (TB).

** The HQA-BB2 junction box must be used when installing the camera to HQA-PM2 or HB34S2-CM.

ORDERING

H4W4PER2	Network WDR 4 MP IR Rugged Mini Dome Camera, 1/3" CMOS, 2.7–13.5 mm MFZ, 2 IR LEDs, PoE, H.265+

DIMENSIONS

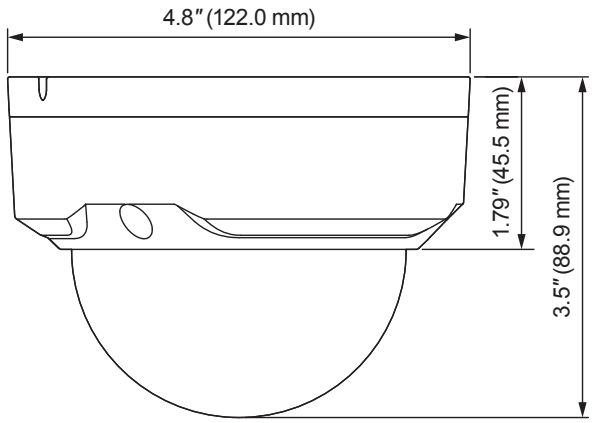

For more information
www.honeywell.com/security

Honeywell Security and Fire
2700 Blankenbaker Pkwy, Suite 150
Louisville, KY 40299
1.800.323.4576
www.honeywell.com

Honeywell reserves the right, without notification, to make changes in product design or specifications.

L/H4W4PER2D/D | 10/17
© 2017 Honeywell International Inc.

Honeywell