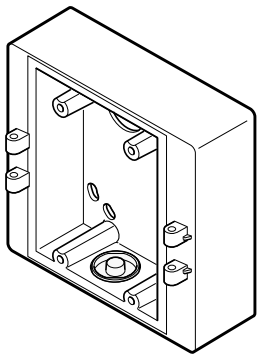

Panasonic®

Adapter Box
Operating Instructions

Model No. WV-Q120

Before attempting to connect or operate this product,
please read these instructions carefully and save this manual for future use.

The model number is abbreviated in some descriptions in this manual.

Ns0212-0 PGQX1121ZA Printed in China

Features

This unit is an adapter box designed to mount only the network cameras, WV-SW314, WV-SW316 and WV-SW316L.

- This unit can be installed on an junction box (locally procured) mounted on a wall or a wall having a hole through which the cable passes. This unit can also be connected with the open piping.

Disclaimer of warranty

IN NO EVENT SHALL Panasonic System Networks Co., Ltd. BE LIABLE TO ANY PARTY OR ANY PERSON, EXCEPT FOR REPLACEMENT OR REASONABLE MAINTENANCE OF THE PRODUCT, FOR THE CASES, INCLUDING BUT NOT LIMITED TO BELOW:

1) ANY DAMAGE AND LOSS, INCLUDING WITHOUT LIMITATION, DIRECT OR INDIRECT, SPECIAL, CONSEQUENTIAL OR EXEMPLARY, ARISING OUT OF OR RELATING TO THE PRODUCT;
2) PERSONAL INJURY OR ANY DAMAGE CAUSED BY INAPPROPRIATE USE OR NEGLIGENT OPERATION OF THE USER;
3) UNAUTHORIZED DISASSEMBLE, REPAIR OR MODIFICATION OF THE PRODUCT BY THE USER;
4) INCONVENIENCE OR ANY LOSS ARISING WHEN IMAGES ARE NOT DISPLAYED, DUE TO ANY REASON OR CAUSE INCLUDING ANY FAILURE OR PROBLEM OF THE PRODUCT.

Precautions

Refer installation work to the dealer.
Installation work requires technique and experiences. Failure to observe this may cause fire, electric shock, injury, or damage to the product.
Be sure to consult the dealer.

Select an installation area that can support the total weight.
Otherwise, the mounting portions will deteriorate and accidents such as a fall of this product may occur.
Installation work shall be started after sufficient reinforcement.

Avoid installing this bracket in the locations where salt damage occurs or corrosive gas is produced.
Otherwise, the mounting portions will deteriorate and accidents such as a fall of this product may occur.

Do not install this product in locations subject to vibration.
Loosening of mounting screws or bolts may cause a fall of the product resulting in injury.

Install this bracket on a high place to keep it out of the way of people or objects.
Failure to observe this may cause a drop resulting in injury or accidents.

Periodic inspections shall be conducted.
Rust on the metal parts or screws may cause a fall of the product resulting in injury or accidents.
Consult the dealer for the inspections.

Do not install other than the specific cameras.
Failure to observe this may cause a drop resulting in injury or accidents.

The screws and bolts must be tightened with the specified torque.
Loosening of mounting screws or bolts may cause a fall of the product resulting in injury or accidents.

Important:

- Required pull-out capacity of a single screw/bolt is 196 N {37.99 lbf} or more.

Precautions for installation

- **Ambient temperature and humidity**
  Use this product at temperatures within –40 °C - +50 °C {–40 °F - +122 °F}, and humidity below 90 %.
- **When connecting the open wiring to the adapter box, connect it through the cable access hole. (Compliant with G3/4 parallel pipe threads)**
- **The screws that secure this product are not supplied.**
  Prepare them according to the material and strength of the area where the product is to be installed.
- **For installation, read the operating instructions for the camera to be used together.**

Installation

Important:

- Before installation, make sure that the power of the camera is turned off.

1 Fix the adapter box onto the wall or junction box.
Fix the adapter box to the wall directly or a junction box (locally procured). (screws to be used here unsupplied)

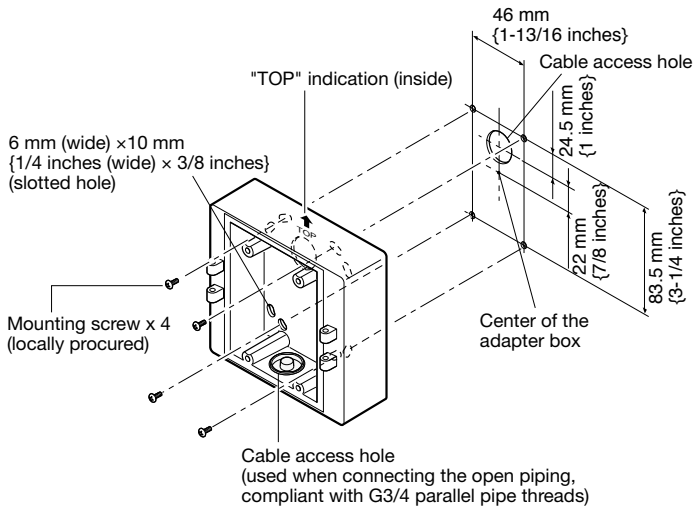

- Make the "TOP" indication inside the adapter box upside.
- For use of a junction box, the use of 2 pieces in a side-by-side manner is recommended as shown in the illustration below. Therefore a hand can be put from the unused box to handle cables.

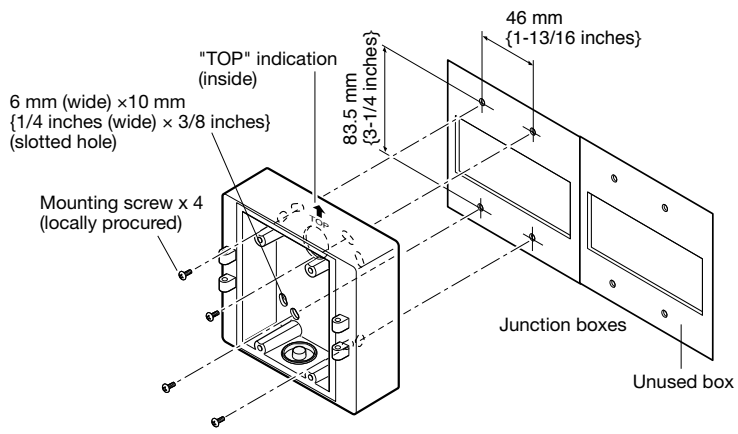

Important:

- For outdoor use, waterproof the screws and screw holes.

(To be continued to the reverse page)

2 Fix the camera mount bracket and camera onto the adapter box.

① Use the supplied adapter box mounting screw (M4x35) to temporarily install the camera mount bracket on either right or left side of the hinge of the adapter box and to consequently allow it to be opened or closed.
If the wall is on either right or left side, installation shall be performed on the hinge on the opposite side of the wall.

Note:
- The illustration of the camera being used in this document represents the model WV-SW316.

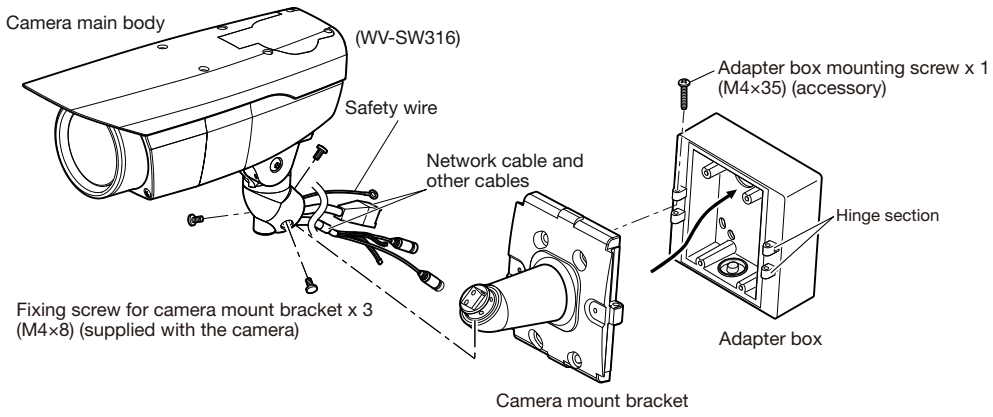

② Pass the network cable and other cables through the camera mount bracket, secure the cable to the cable clamp, and place the cable on the wall side.

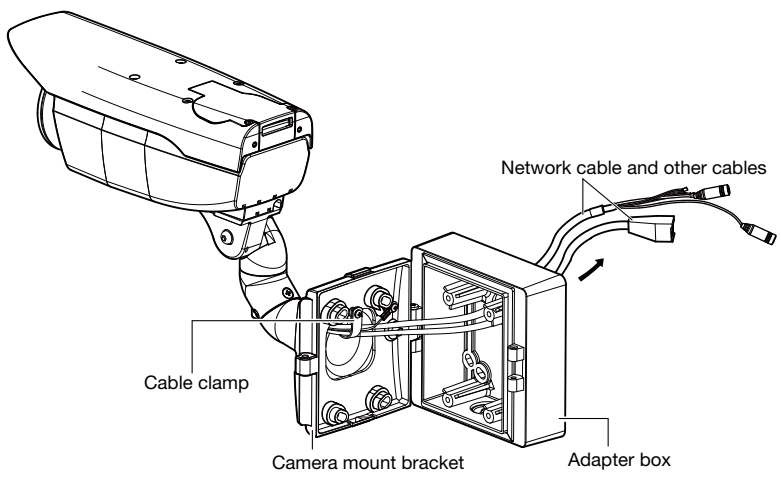

③ Secure the camera main unit to the camera mount bracket with 3 pieces of the fixing screws for camera mount bracket (supplied with the camera).

Important:
- The screws must be tightened with the following torque to attach the camera mount bracket to the camera hinge section of the adapter box.
  Recommended tightening torque M4: 0.78 N·m {0.58 lbf·ft}
- The screws must be tightened with the following torque to attach the camera body to the camera mount bracket.
  Recommended tightening torque M4: 0.78 N·m {0.58 lbf·ft}

3 Fix the camera mount bracket onto the adapter box.

Fix the camera mount bracket on the adapter box with four mounting screws (M5×20, accessory).
After securing the camera mount bracket, fix the mount bracket cover on the camera mount bracket with two mounting screws (supplied with the camera) for the mounting bracket cover.

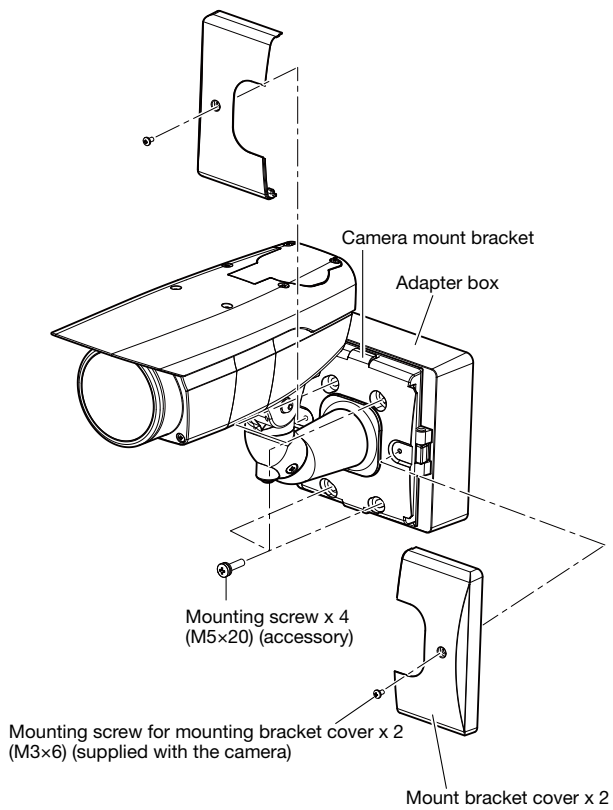

Important:
- The screws must be tightened with the following torque to attach the camera mount bracket to the adapter box.
  Recommended tightening torque M5: 1.86 N·m {1.37 lbf·ft}
- The screws must be tightened with the following torque to attach the mount bracket cover to the camera mount bracket.
  Recommended tightening torque M3: 0.59 N·m {0.44 lbf·ft}

Specifications

Ambient operating temperature:	–40 °C - +50 °C {–40 °F - +122 °F}
Dimensions:	133 mm (W) x 133 mm (H) x 50 mm (D) {5-1/4 inches (W) x 5-1/4 inches (H) x 1-31/32 inches (D)}
Mass:	Approx. 510 g {1.13 lbs.}
Finish:	Aluminum die cast, silver metallic painting

Exterior Dimensions

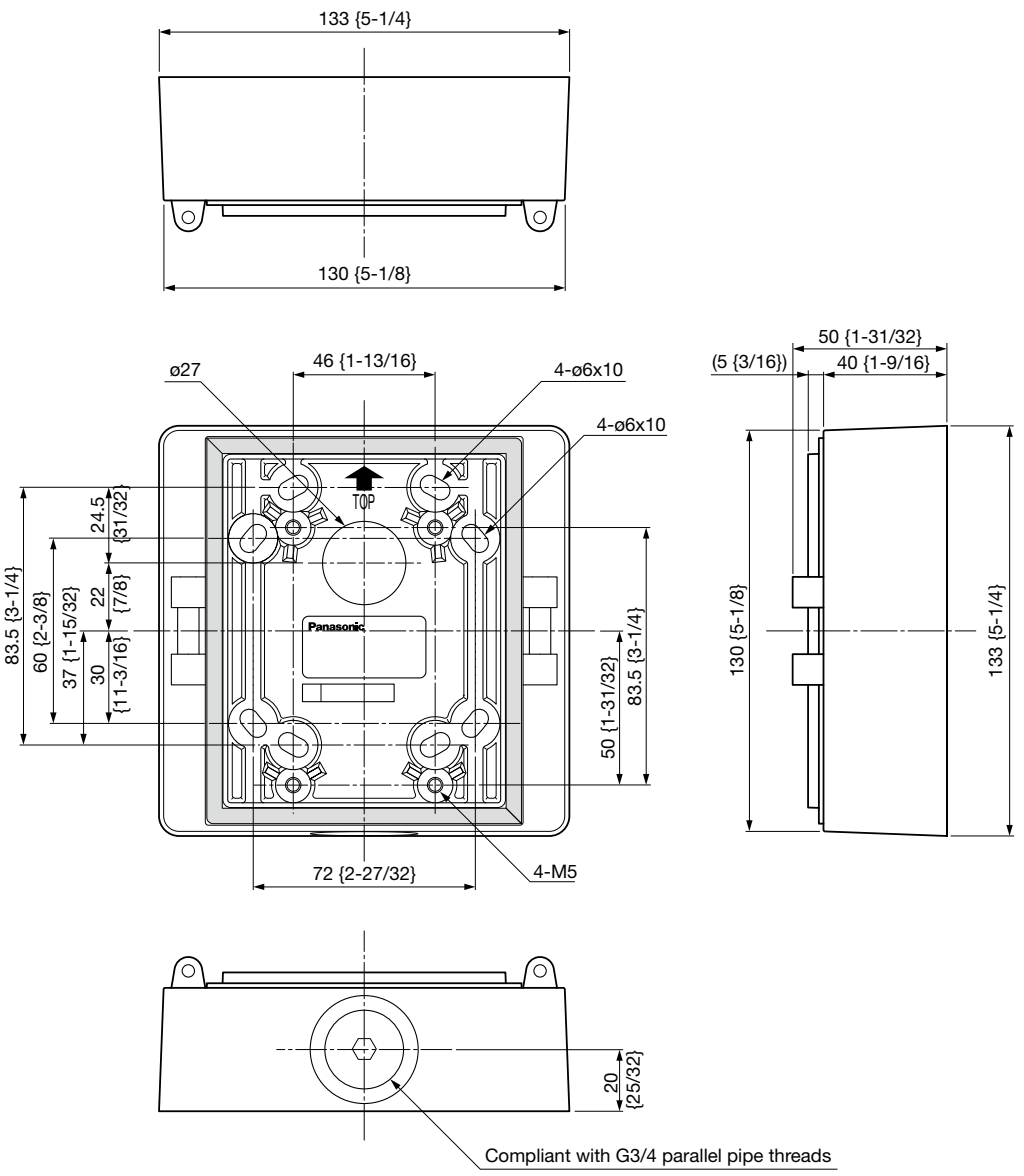

(Unit: mm {inches})

Standard accessories

Operating Installations (this document) .....1 pc.

The following parts are used during installation procedures.
Mounting screw (M5×20).....4 pcs.
Adapter box mounting screw (M4×35).....1 pc.

Panasonic System Communications Company of North America, Unit of Panasonic Corporation of North America
www.panasonic.com/business/
For customer support, call 1.800.528.6747
Three Panasonic Way, Secaucus, New Jersey 07094 U.S.A.

Panasonic Canada Inc.
5770 Ambler Drive, Mississauga, Ontario, L4W 2T3 Canada
(905)624-5010
www.panasonic.ca

© Panasonic System Networks Co., Ltd. 2012